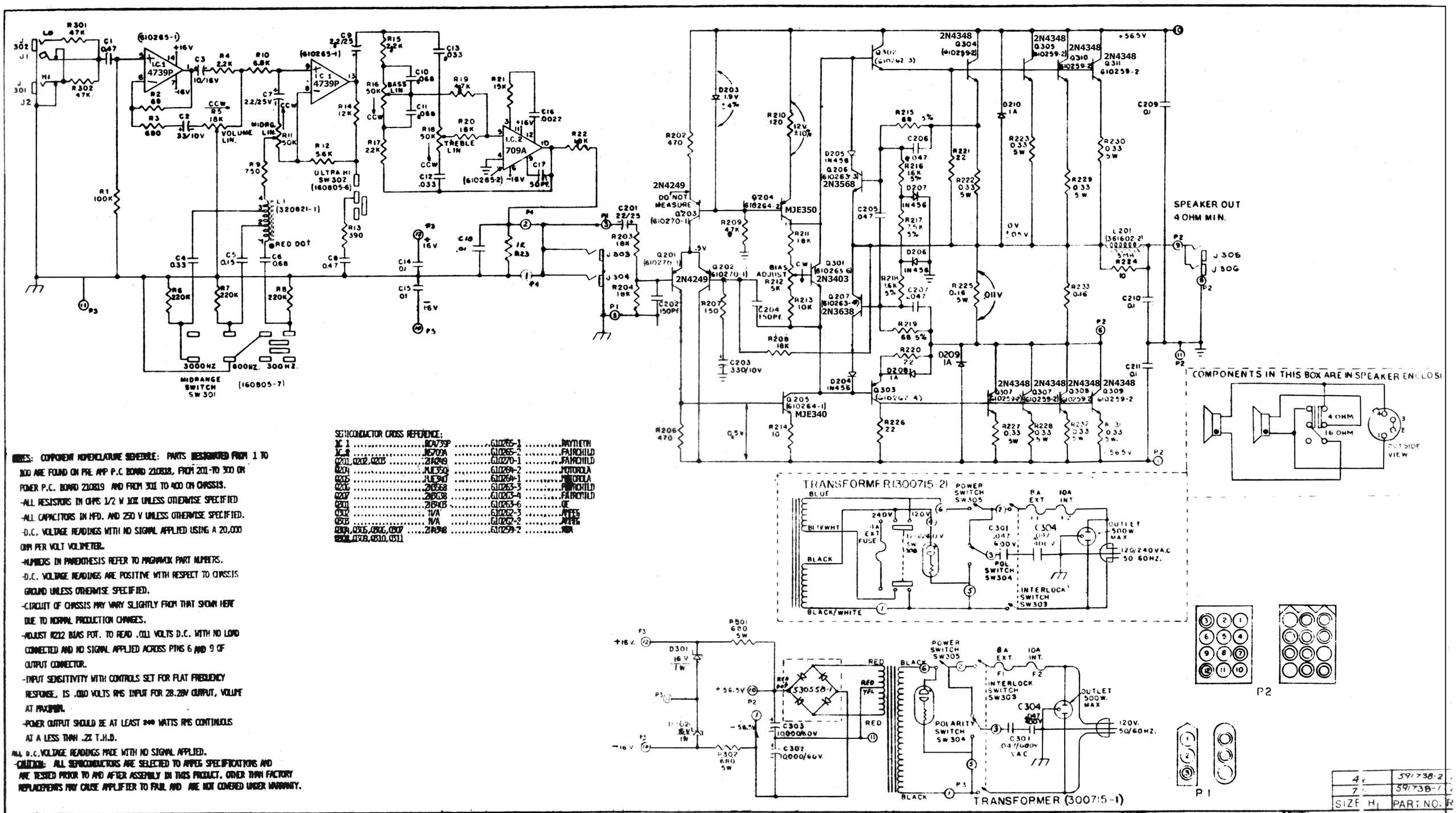


| | | |
|---|---|---|
| 4 | | 591738-2 |
| 7 | | 591738B-1 |
| SIZE | H1 | PART NO. |

ADDITIONAL MAGNAVOX SPECIFICATIONS

MATERIAL

FINISH

— TOLERANCES — UNLESS OTHERWISE SPECIFIED

| DECIMALS | ± TOL | FRACTIONS | ± TOL |
|---|---|---|---|
| .X | .100 | UP TO 6 | 1/64 |
| .XX | .030 | 6 TO 24 | 1/32 |
| .XXX | .010 | ABOVE 24 | 1/16 |

THREADS - CLASS 2 FIT AFTER PLATING
MACHINE FINISHES 64 MICRO INCH MAX.
CONCENTRICITY .005 T.I.R.
ANGULAR TOL. ± 1/2°
DIMENSIONS IN INCHES UNLESS OTHERWISE SPECIFIED ON DRAWING.
DO NOT SCALE DRAWING

**THE AMPEG COMPANY**
DIVISION OF THE MAGNAVOX COMPANY
P.O. BOX 518 LINDEN, N.J. 07036

**V-6B**

| | SIGNATURE | DATE |
|---|---|---|
| DR. | J. DISANO | 1-6-73 |
| CHK. | W. Hughes | 1/3/74 |
| ENG. | [illegible] | 1/7/74 |
| SCALE | | |

SIZE D — DWG. NO. 591738

REVISIONS — REVISED AN 7807